ANNEXES

1 – Caractéristiques électriques du sol

2- circuit NE555

3- circuit LM335

4 – module ARDUINO UNO

5 – module X-bee

RECOMMANDATION UIT-R P.527-3*

CARACTÉRISTIQUES ÉLECTRIQUES DU SOL

(1978-1982-1990-1992)

L'Assemblée des radiocommunications de l'UIT,

considérant

a) que la propagation de l'onde de sol dépend surtout des caractéristiques électriques du sol et que la mesure dans laquelle les couches inférieures influent sur les valeurs des caractéristiques électriques du sol dépend de la profondeur à laquelle pénètre l'énergie radioélectrique;

b) que les caractéristiques électriques peuvent être représentées par trois paramètres: la perméabilité μ, la permittivité ε et la conductivité σ;

c) que l'on peut normalement considérer que la perméabilité du sol μ est égale à la perméabilité du vide et que l'on a besoin de valeurs de la permittivité relative et de la conductivité en fonction de la fréquence pour différents types de sol;

d) que l'on a besoin de connaître la profondeur de pénétration en fonction de la fréquence,

recommande

que les renseignements de l'Annexe 1 soient utilisés pour calculer le champ de l'onde de sol aux fréquences considérées et dans les conditions indiquées.

ANNEXE 1

1. Introduction

La présente Annexe donne les valeurs types des caractéristiques électriques pour différents types de sol et examine les facteurs physiques dont dépendent ces caractéristiques.

2. Valeurs de permittivité et de conductivité

La Fig. 1 donne les valeurs représentatives de conductivité et de permittivité pour différents types de sol, en fonction de la fréquence. Ces valeurs, souvent qualifiées de valeurs intrinsèques, se rapportent à une structure homogène du sous-sol.

Toutefois, la structure du sous-sol est rarement homogène; elle se compose plutôt de deux ou de plusieurs couches d'épaisseurs différentes, ayant des conductivités et des permittivités différentes. C'est un fait dont il faut tenir compte, ce que l'on peut faire en introduisant la notion de paramètres équivalents. Cette notion permet d'appliquer les courbes de propagation de l'onde de sol pour une terre lisse et homogène de la Recommandation UIT-R P.368, en remplaçant le sous-sol hétérogène par une structure homogène équivalente dont les paramètres sont la conductivité et la permittivité équivalentes. Il est possible de déterminer ces paramètres si l'on connaît la valeur des paramètres pour chaque couche.

Les valeurs de la permittivité relative (constante diélectrique) et de la conductivité données par la Fig. 1 pour divers types de sol indiquent la gamme approximative de valeurs que l'on peut observer dans diverses conditions; cependant, dans des situations extrêmes, on peut observer des valeurs se situant en dehors de cette gamme. Dans les zones fertiles très humides, on relève des valeurs de conductivité beaucoup plus fortes, alors que, dans les régions montagneuses ou arctiques, la conductivité peut descendre à 10^{-5} S/m aux fréquences inférieures à 100 MHz. Quand le sol est recouvert de neige, on peut trouver des valeurs de permittivité plus basses que celles qu'indique la courbe E de la Fig. 1. La conductivité des lacs et des rivières augmente avec la teneur de l'eau en impuretés.

---

* La Commission d'études 3 des radiocommunications a apporté des modifications rédactionnelles à cette Recommandation en 2000 conformément aux dispositions de la Résolution UIT-R 44.

FIGURE 1

Permittivité relative, ε_r, et conductivité, σ, en fonction de la fréquence

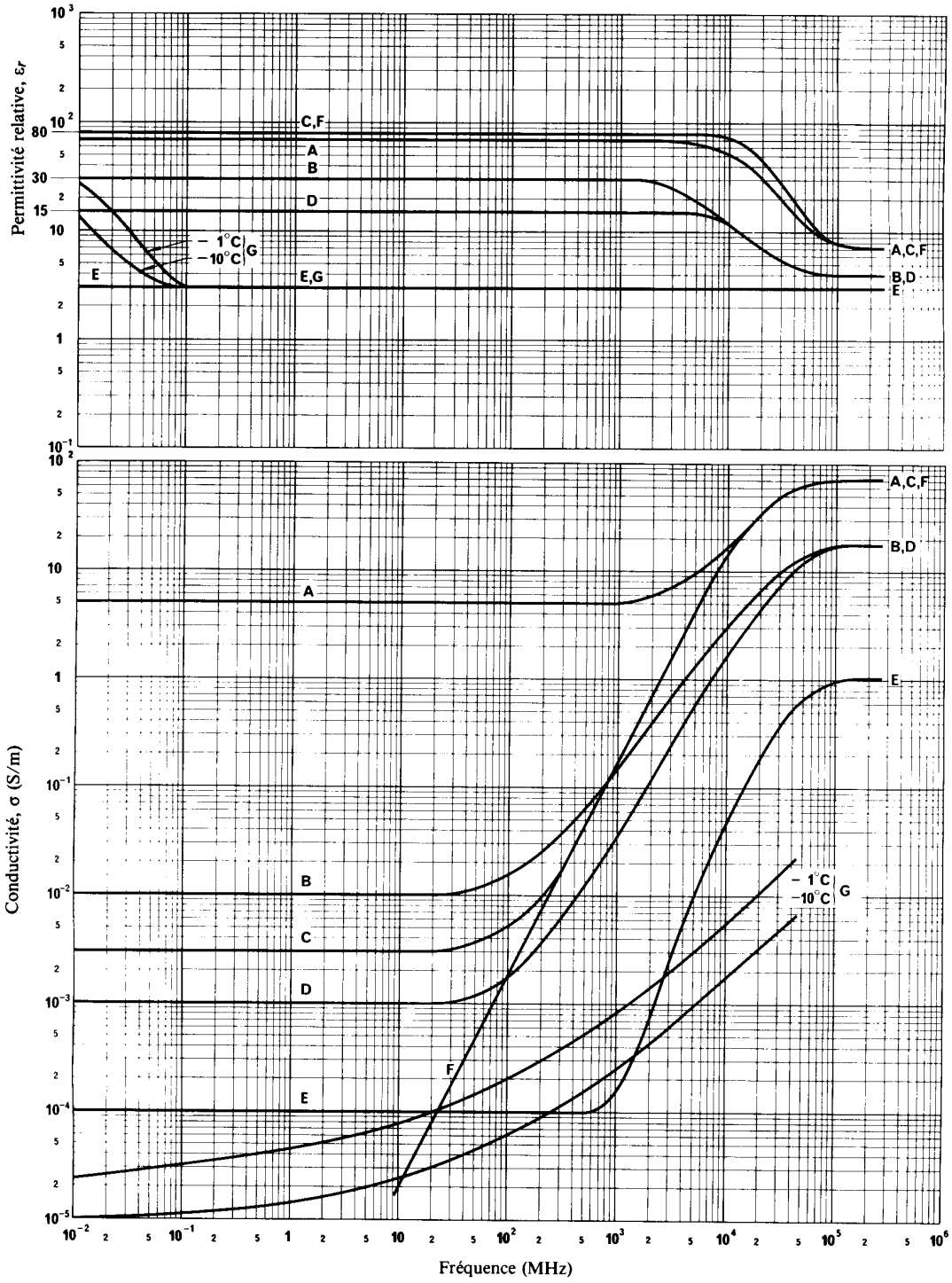

A: eau de mer (salinité moyenne), 20° C
B: sol humide
C: eau douce, 20° C
D: sol moyennement sec
E: sol très sec
F: eau pure, 20° C
G: glace (eau douce)

D01-sc

3. Pénétration et étalement des ondes

3.1 La mesure dans laquelle les couches profondes du sol influent sur la valeur de ses caractéristiques électriques dépend de la profondeur de pénétration de l'énergie radioélectrique, δ, que l'on définit comme celle à laquelle l'intensité de l'onde est affaiblie dans le rapport 1/e (soit 37%) de la valeur qu'elle avait à la surface. La Fig. 2 indique la profondeur de pénétration en fonction de la fréquence pour différents types de sol et d'eau.

3.2 Si la profondeur de pénétration est inférieure à l'épaisseur de la couche, les couches sous-jacentes ont peu d'influence. Si au contraire la profondeur de pénétration est très supérieure à l'épaisseur de la couche superficielle, la propagation dépend des constantes du sol des couches inférieures.

Aux fréquences basses, sauf pour l'eau de mer, il y a lieu, comme le montre la Fig. 2, de tenir compte des couches d'une profondeur de 100 m, sinon davantage. Cela est d'une importance particulière lorsque les couches supérieures ont la conductivité la plus faible et que l'énergie peut donc pénétrer plus facilement aux niveaux inférieurs. De tels cas se présentent, par exemple, pour les lacs et zones océaniques recouverts de glace.

3.3 L'énergie radioélectrique reçue en un point donné ne se propage pas uniquement le long du trajet qui relie directement ce point à l'émetteur, mais également sur un grand nombre de trajets indirects répartis de part et d'autre du précédent. Il faut donc considérer les caractéristiques électriques, non seulement le long du trajet direct lui-même, mais aussi dans tout le domaine où se produit l'étalement latéral des ondes. Il n'est pas possible d'assigner des limites précises à ce domaine; on a cependant émis l'hypothèse qu'il coïncide, en fait, avec la première zone de Fresnel.

FIGURE 2

Profondeur de pénétration δ en fonction de la fréquence

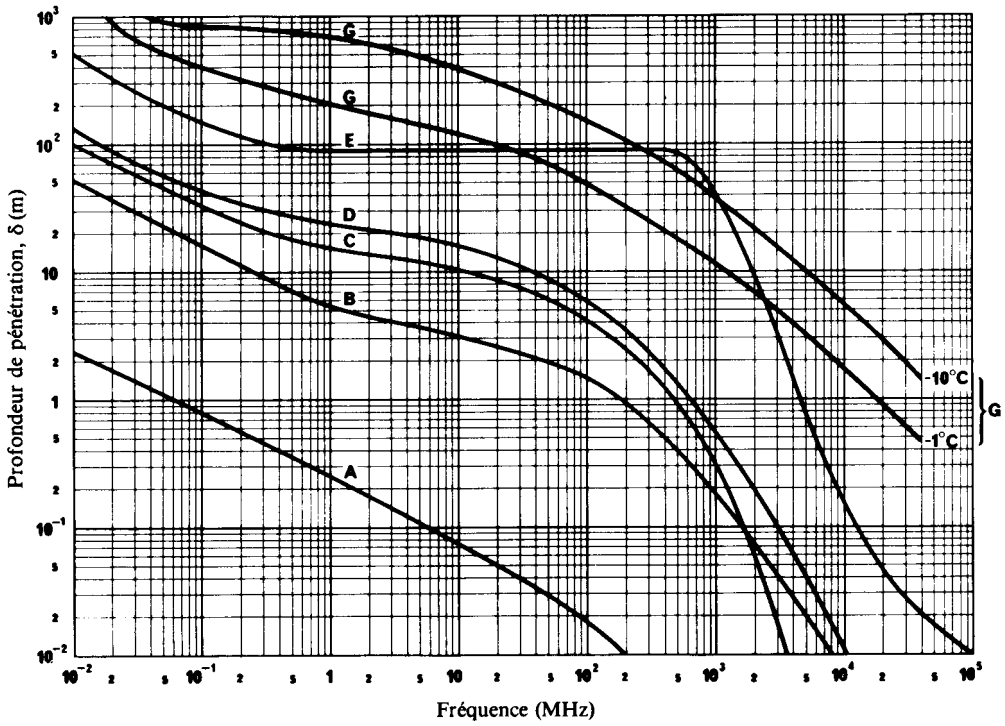

4. Mer

4.1 Eau de mer

La conductivité électrique de l'eau de mer est fonction de la teneur en sel (salinité) et de la température. Aux fréquences inférieures à 1 GHz, sa valeur est donnée par l'expression:

$$\sigma = 0{,}18\, C^{0{,}93}\ [1 + 0{,}02\ (T - 20)] \qquad \text{S/m} \tag{1}$$

où C est la teneur en sel en millièmes et T la température en degrés Celsius.

A 20 °C, on utilise une valeur de 5 S/m comme valeur moyenne à l'échelle mondiale. Dans certaines zones de la mer Baltique, on a observé des valeurs inférieures à 1 S/m. Dans la mer Rouge, la conductivité peut dépasser 6 S/m.

La permittivité de l'eau de mer est également fonction de la salinité et de la température. On a souvent utilisé une valeur de 80 pour exprimer la permittivité relative de l'eau de mer à 20 °C, bien que la valeur réelle à basses fréquences soit d'environ 70. Toutefois, aux fréquences inférieures à 100 MHz environ, ε_r est bien inférieur à 60 $\lambda\sigma$. On peut alors utiliser l'une ou l'autre valeur pour calculer les facteurs de propagation de l'onde de sol au-dessus de la mer sans noter de différences mesurables dans les résultats.

4.2 Glace d'eau de mer

La glace d'eau de mer est une substance complexe dont les caractéristiques électriques varient fortement selon la température et l'âge de la glace. La gamme de valeurs de ces caractéristiques électriques et des profondeurs de pénétration est représentée à la Fig. 3 pour les fréquences comprises entre 0,1 et 30 MHz. Au-dessus de 30 MHz, les caractéristiques électriques de la glace d'eau de mer se rapprochent asymptotiquement de celles de la glace d'eau douce.

5. Facteurs influant sur les caractéristiques électriques équivalentes

La valeur équivalente des constantes du sol dépend, non seulement de la nature du sol, mais aussi de sa teneur en humidité et de sa température; les autres facteurs qui interviennent sont la fréquence, la formation géologique générale du terrain, ainsi que la profondeur équivalente de pénétration et l'étalement latéral des ondes.

5.1 Nature du sol

De nombreuses mesures ont permis d'établir que la valeur des caractéristiques électriques varie avec la nature du sol; il semble cependant probable que cette variation est due, moins à la composition chimique du sol qu'à ses propriétés d'absorption et de rétention de l'humidité. La conductivité de l'argile est normalement de l'ordre de 10^{-2} S/m; or, on a pu montrer que, pour l'argile séchée, la conductivité peut descendre jusqu'à 10^{-4} S/m, c'est-à-dire à une valeur du même ordre que celle du granit.

5.2 Teneur en humidité

La teneur du sol en humidité est probablement le paramètre qui influe le plus sur la valeur de ses constantes électriques. Des mesures effectuées en laboratoire ont montré que, si l'on fait croître la teneur en humidité à partir d'une valeur faible, les valeurs augmentent rapidement et deviennent maximales pour des teneurs en humidité voisines de celles qu'on rencontre normalement dans les sols réels correspondants. Il semble que, en un lieu donné, l'humidité du sol reste très sensiblement constante toute l'année à des profondeurs égales ou supérieures à 1 m; il peut y avoir une augmentation de cette humidité pendant les chutes de pluie, mais, une fois que la pluie a cessé, l'écoulement des eaux ainsi que l'évaporation en surface ont tôt fait de la ramener à sa valeur normale.

Toutefois, un même sol peut présenter des variations d'humidité considérables d'un lieu à un autre, par suite de différences entre les formations géologiques générales, auxquelles correspond un écoulement plus ou moins rapide des eaux.

FIGURE 3

Valeur de la profondeur de pénétration δ, de la permittivité relative ε_r et de la conductivité σ de la glace d'eau de mer

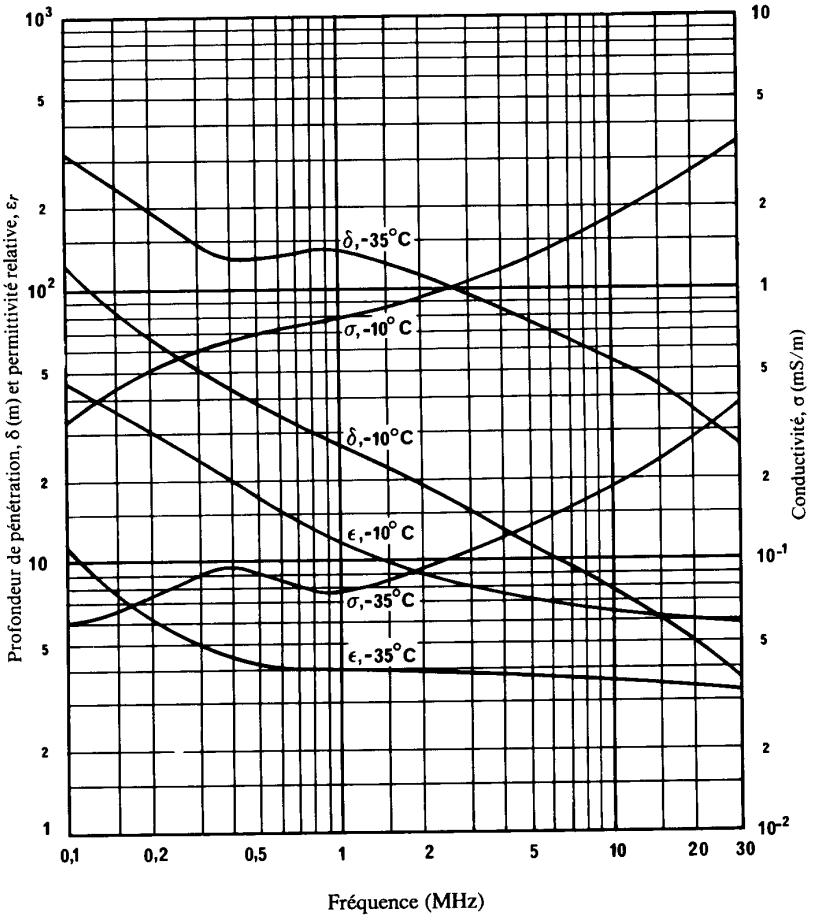

5.3 Température

Des mesures de laboratoire portant sur les caractéristiques électriques du sol ont montré que, aux basses fréquences, le coefficient de température de la conductivité est de l'ordre de 3% par degré Celsius; tandis qu'il est négligeable dans le cas de la permittivité. Au point de congélation de l'eau, on observe généralement une substantielle diminution de la valeur de la permittivité comme de la conductivité. Bien que les variations dont il s'agit soient appréciables, il convient de se rappeler que la température varie annuellement entre des limites de plus en plus serrées lorsque la profondeur augmente, aussi est-il vraisemblable que la température n'a une influence notable qu'aux fréquences élevées, pour lesquelles la pénétration des ondes est faible.

5.4 Variations saisonnières

L'effet des variations saisonnières sur l'affaiblissement de propagation de l'onde de sol dépend du rapport entre la profondeur du sol à laquelle se manifestent de telles variations et la profondeur de pénétration. Un tel effet dépend toujours de la fréquence.

5.5 Absorption de l'énergie par des objets à la surface de la Terre

Les objets se trouvant à la surface de la Terre n'influent pas directement sur la valeur des caractéristiques électriques du sol lui-même, mais ils peuvent participer dans une mesure importante à l'affaiblissement des ondes de sol; on peut tenir compte de ces pertes d'énergie en utilisant, dans les calculs de propagation, des valeurs des caractéristiques électriques modifiées de façon appropriée.

xx555 Precision Timers

1 Features

- Timing From Microseconds to Hours
- Astable or Monostable Operation
- Adjustable Duty Cycle
- TTL-Compatible Output Can Sink or Source Up to 200 mA
- On Products Compliant to MIL-PRF-38535, All Parameters Are Tested Unless Otherwise Noted. On All Other Products, Production Processing Does Not Necessarily Include Testing of All Parameters.

2 Applications

- Fingerprint Biometrics
- Iris Biometrics
- RFID Reader

3 Description

These devices are precision timing circuits capable of producing accurate time delays or oscillation. In the time-delay or mono-stable mode of operation, the timed interval is controlled by a single external resistor and capacitor network. In the a-stable mode of operation, the frequency and duty cycle can be controlled independently with two external resistors and a single external capacitor.

The threshold and trigger levels normally are two-thirds and one-third, respectively, of V_{CC}. These levels can be altered by use of the control-voltage terminal. When the trigger input falls below the trigger level, the flip-flop is set, and the output goes high. If the trigger input is above the trigger level and the threshold input is above the threshold level, the flip-flop is reset and the output is low. The reset (RESET) input can override all other inputs and can be used to initiate a new timing cycle. When RESET goes low, the flip-flop is reset, and the output goes low. When the output is low, a low-impedance path is provided between discharge (DISCH) and ground.

The output circuit is capable of sinking or sourcing current up to 200 mA. Operation is specified for supplies of 5 V to 15 V. With a 5-V supply, output levels are compatible with TTL inputs.

Device Information(1)

PART NUMBER	PACKAGE	BODY SIZE (NOM)
xx555	PDIP (8)	9.81 mm × 6.35 mm
	SOP (8)	6.20 mm × 5.30 mm
	TSSOP (8)	3.00 mm × 4.40 mm
	SOIC (8)	4.90 mm × 3.91 mm

(1) For all available packages, see the orderable addendum at the end of the datasheet.

4 Simplified Schematic

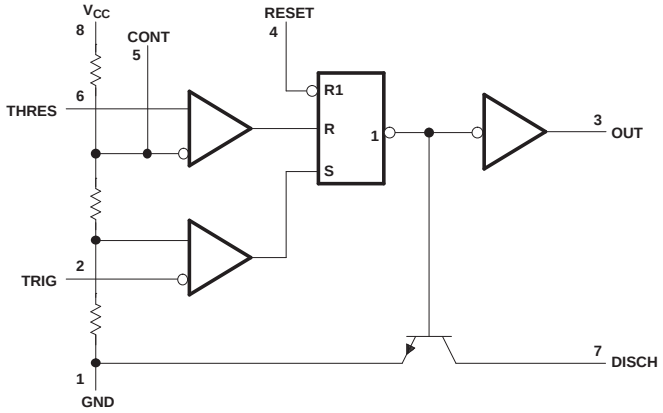

6 Pin Configuration and Functions

NA555...D OR P PACKAGE
NE555...D, P, PS, OR PW PACKAGE
SA555...D OR P PACKAGE
SE555...D, JG, OR P PACKAGE
(TOP VIEW)

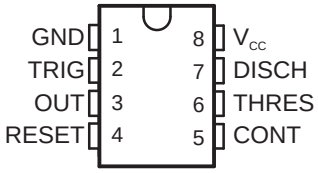

SE555...FK PACKAGE
(TOP VIEW)

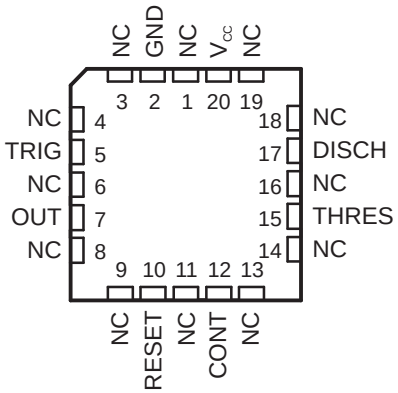

NC – No internal connection

Pin Functions

PIN			I/O	DESCRIPTION
NAME	D, P, PS, PW, JG	FK		
	NO.			
CONT	5	12	I/O	Controls comparator thresholds, Outputs 2/3 VCC, allows bypass capacitor connection
DISCH	7	17	O	Open collector output to discharge timing capacitor
GND	1	2	–	Ground
NC		1, 3, 4, 6, 8, 9, 11, 13, 14, 16, 18, 19	–	No internal connection
OUT	3	7	O	High current timer output signal
RESET	4	10	I	Active low reset input forces output and discharge low.
THRES	6	15	I	End of timing input. THRES > CONT sets output low and discharge low
TRIG	2	5	I	Start of timing input. TRIG < ½ CONT sets output high and discharge open
V_{CC}	8	20	–	Input supply voltage, 4.5 V to 16 V. (SE555 maximum is 18 V)

7 Specifications

7.1 Absolute Maximum Ratings[1]

over operating free-air temperature range (unless otherwise noted)

			MIN	MAX	UNIT
V_{CC}	Supply voltage[2]			18	V
V_I	Input voltage	CONT, RESET, THRES, TRIG		V_{CC}	V
I_O	Output current			±225	mA
θ_{JA}	Package thermal impedance[3][4]	D package		97	°C/W
		P package		85	
		PS package		95	
		PW package		149	
θ_{JC}	Package thermal impedance[5][6]	FK package		5.61	°C/W
		JG package		14.5	
T_J	Operating virtual junction temperature			150	°C
	Case temperature for 60 s	FK package		260	°C
	Lead temperature 1,6 mm (1/16 in) from case for 60 s	JG package		300	°C

(1) Stresses beyond those listed under *Absolute Maximum Ratings* may cause permanent damage to the device. These are stress ratings only, and functional operation of the device at these or any other conditions beyond those indicated under *Recommended Operating Conditions* is not implied. Exposure to absolute-maximum-rated conditions for extended periods may affect device reliability.
(2) All voltage values are with respect to GND.
(3) Maximum power dissipation is a function of $T_J(max)$, θ_{JA}, and T_A. The maximum allowable power dissipation at any allowable ambient temperature is $P_D = (T_J(max) - T_A) / \theta_{JA}$. Operating at the absolute maximum T_J of 150°C can affect reliability.
(4) The package thermal impedance is calculated in accordance with JESD 51-7.
(5) Maximum power dissipation is a function of $T_J(max)$, θ_{JC}, and T_C. The maximum allowable power dissipation at any allowable case temperature is $P_D = (T_J(max) - T_C) / \theta_{JC}$. Operating at the absolute maximum T_J of 150°C can affect reliability.
(6) The package thermal impedance is calculated in accordance with MIL-STD-883.

7.2 Handling Ratings

PARAMETER	DEFINITION	MIN	MAX	UNIT
T_{stg}	Storage temperature range	–65	150	°C

7.3 Recommended Operating Conditions

over operating free-air temperature range (unless otherwise noted)

			MIN	MAX	UNIT
V_{CC}	Supply voltage	NA555, NE555, SA555	4.5	16	V
		SE555	4.5	18	
V_I	Input voltage	CONT, RESET, THRES, and TRIG		V_{CC}	V
I_O	Output current			±200	mA
T_A	Operating free-air temperature	NA555	–40	105	°C
		NE555	0	70	
		SA555	–40	85	
		SE555	–55	125	

7.6 Typical Characteristics

Data for temperatures below –40°C and above 105°C are applicable for SE555 circuits only.

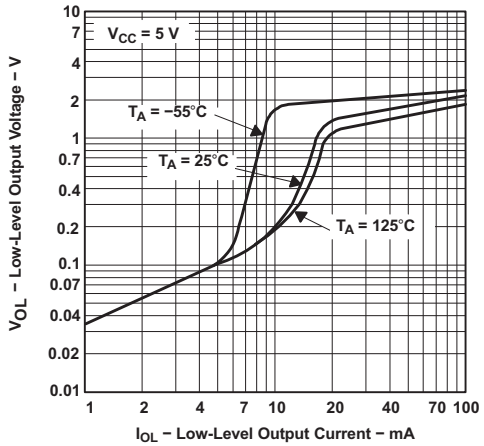

Figure 1. Low-Level Output Voltage vs Low-Level Output Current

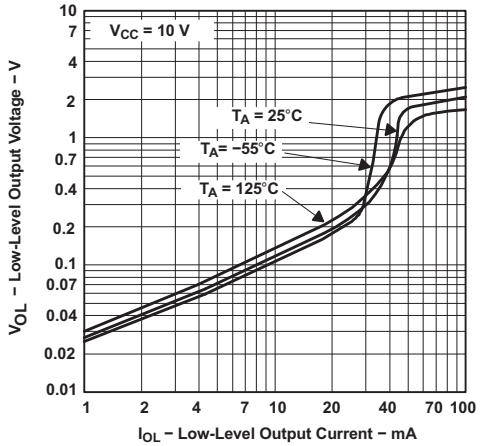

Figure 2. Low-Level Output Voltage vs Low-Level Output Current

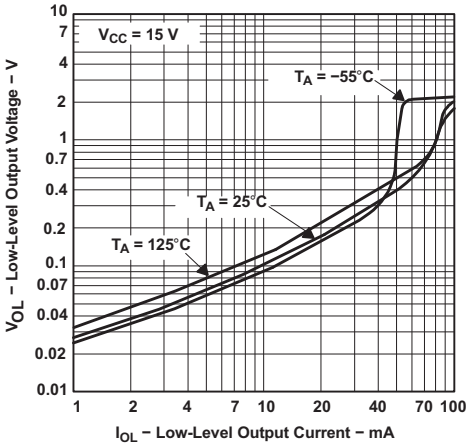

Figure 3. Low-Level Output Voltage vs Low-Level Output Current

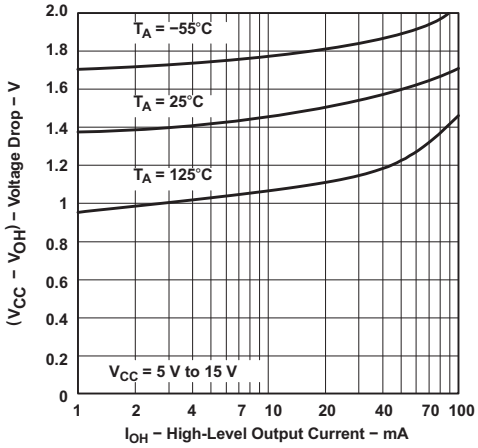

Figure 4. Drop Between Supply Voltage and Output vs High-Level Output Current

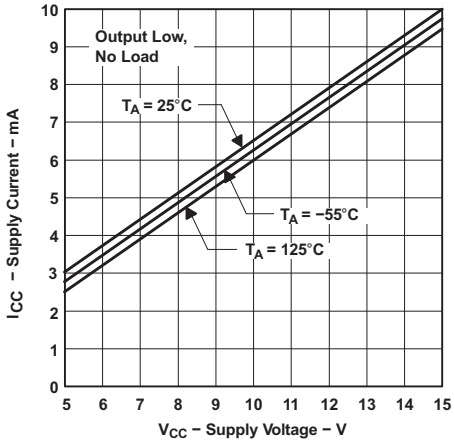

Figure 5. Supply Current vs Supply Voltage

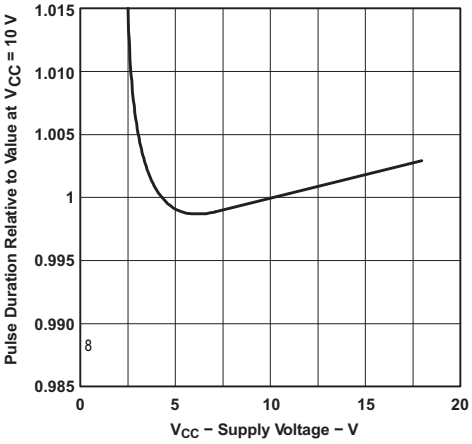

Figure 6. Normalized Output Pulse Duration (Monostable Operation) vs Supply Voltage

Typical Characteristics (continued)

Data for temperatures below –40°C and above 105°C are applicable for SE555 circuits only.

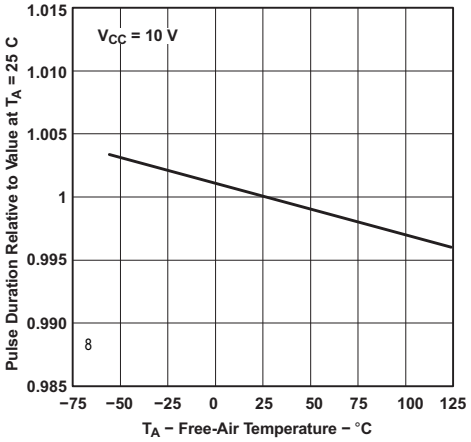

Figure 7. Normalized Output Pulse Duration (Monostable Operation) vs Free-Air Temperature

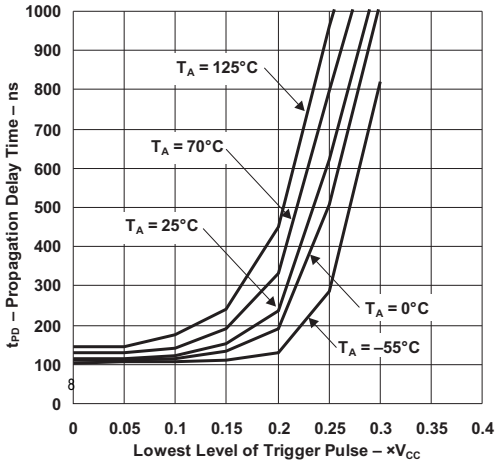

Figure 8. Propagation Delay Time vs Lowest Voltage Level of Trigger Pulse

Feature Description (continued)

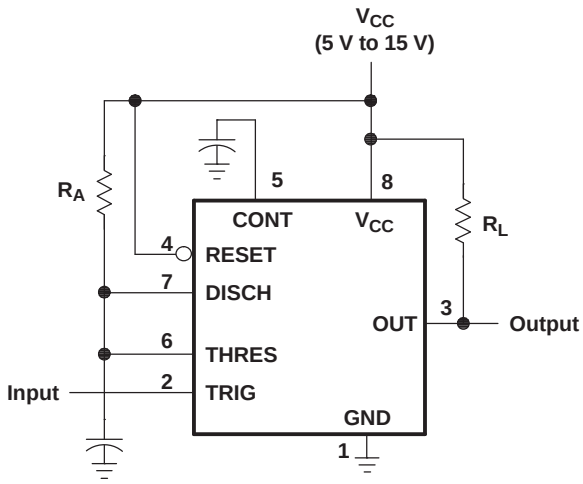

Pin numbers shown are for the D, JG, P, PS, and PW packages.

Figure 9. Circuit for Monostable Operation

Monostable operation is initiated when TRIG voltage falls below the trigger threshold. Once initiated, the sequence ends only if TRIG is high for at least 10 µs before the end of the timing interval. When the trigger is grounded, the comparator storage time can be as long as 10 µs, which limits the minimum monostable pulse width to 10 µs. Because of the threshold level and saturation voltage of Q1, the output pulse duration is approximately $t_w = 1.1R_AC$. Figure 11 is a plot of the time constant for various values of R_A and C. The threshold levels and charge rates both are directly proportional to the supply voltage, V_{CC}. The timing interval is, therefore, independent of the supply voltage, so long as the supply voltage is constant during the time interval.

Applying a negative-going trigger pulse simultaneously to RESET and TRIG during the timing interval discharges C and reinitiates the cycle, commencing on the positive edge of the reset pulse. The output is held low as long as the reset pulse is low. To prevent false triggering, when RESET is not used, it should be connected to V_{CC}.

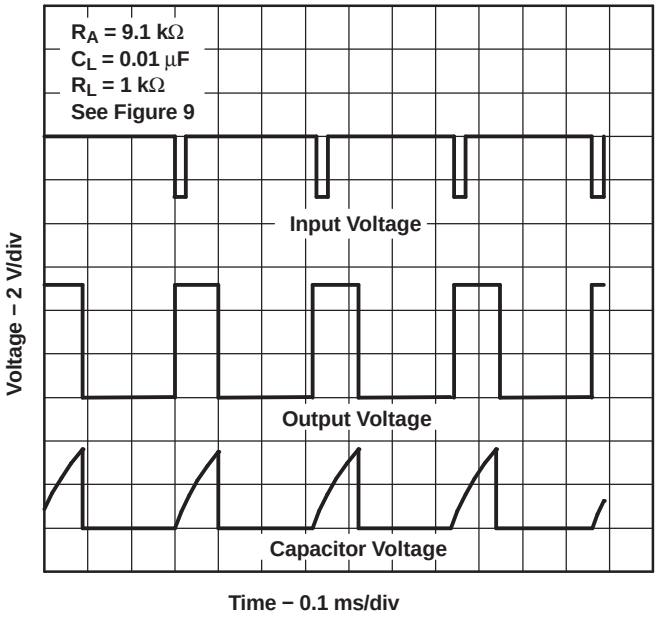

Figure 10. Typical Monostable Waveforms

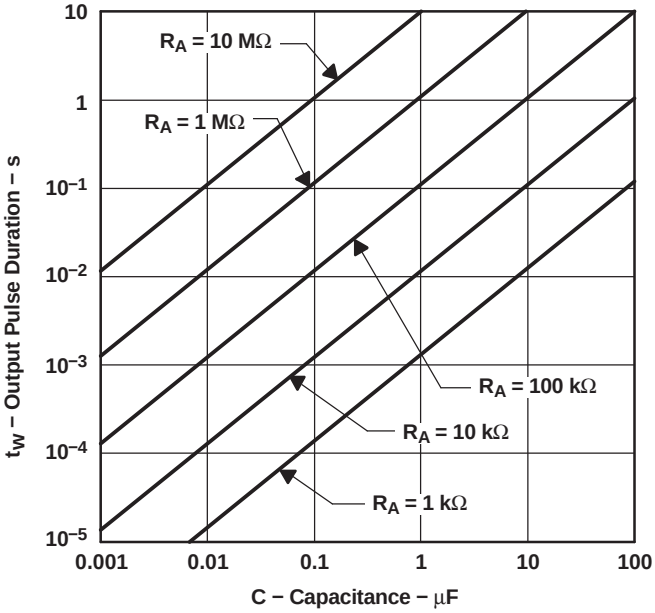

Figure 11. Output Pulse Duration vs Capacitance

Feature Description (continued)

8.3.2 A-stable Operation

As shown in Figure 12, adding a second resistor, R_B, to the circuit of Figure 9 and connecting the trigger input to the threshold input causes the timer to self-trigger and run as a multi-vibrator. The capacitor C charges through R_A and R_B and then discharges through R_B only. Therefore, the duty cycle is controlled by the values of R_A and R_B.

This astable connection results in capacitor C charging and discharging between the threshold-voltage level (≈ 0.67 × V_{CC}) and the trigger-voltage level (≈ 0.33 × V_{CC}). As in the mono-stable circuit, charge and discharge times (and, therefore, the frequency and duty cycle) are independent of the supply voltage.

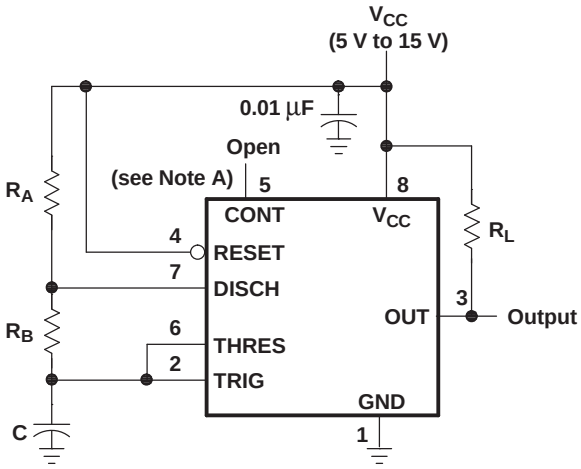

Pin numbers shown are for the D, JG, P, PS, and PW packages.
NOTE A: Decoupling CONT voltage to ground with a capacitor can improve operation. This should be evaluated for individual applications.

Figure 12. Circuit for Astable Operation

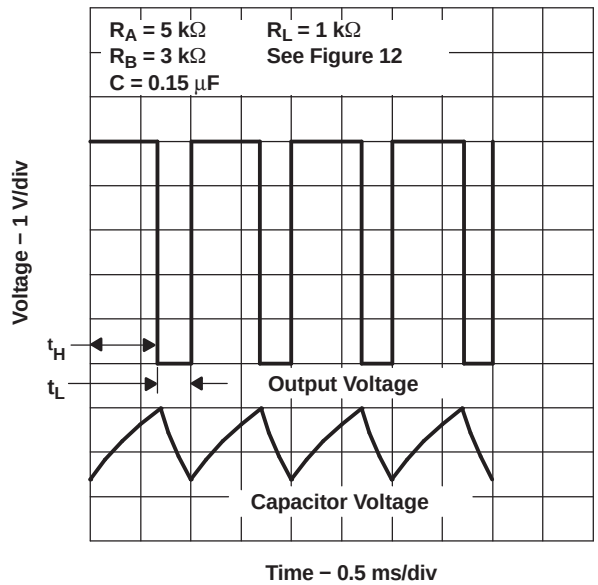

Figure 13. Typical Astable Waveforms

Figure 12 shows typical waveforms generated during astable operation. The output high-level duration t_H and low-level duration t_L can be calculated as follows:

$$t_H = 0.693(R_A + R_B)C \tag{1}$$

$$t_L = 0.693(R_B)C \tag{2}$$

Other useful relationships are shown below:

$$\text{period} = t_H + t_L = 0.693(R_A + 2R_B)C \tag{3}$$

$$\text{frequency} \approx \frac{1.44}{(R_A + 2R_B)C} \tag{4}$$

$$\text{Output driver duty cycle} = \frac{t_L}{t_H + t_L} = \frac{R_B}{R_A + 2R_B} \tag{5}$$

$$\text{Output waveform duty cycle} = \frac{t_H}{t_H + t_L} = 1 - \frac{R_B}{R_A + 2R_B} \tag{6}$$

$$\text{Low-to-high ratio} = \frac{t_L}{t_H} = \frac{R_B}{R_A + R_B} \tag{7}$$

Feature Description (continued)

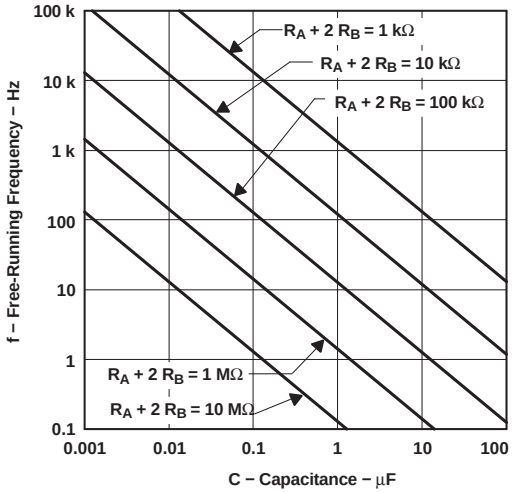

Figure 14. Free-Running Frequency

8.3.3 Frequency Divider

By adjusting the length of the timing cycle, the basic circuit of Figure 9 can be made to operate as a frequency divider. Figure 15 shows a divide-by-three circuit that makes use of the fact that re-triggering cannot occur during the timing cycle.

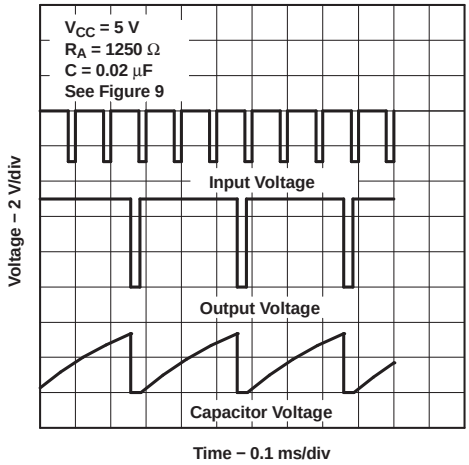

Figure 15. Divide-by-Three Circuit Waveforms

8.4 Device Functional Modes

Table 1. Function Table

RESET	TRIGGER VOLTAGE(1)	THRESHOLD VOLTAGE(1)	OUTPUT	DISCHARGE SWITCH
Low	Irrelevant	Irrelevant	Low	On
High	<1/3 V_{CC}	Irrelevant	High	Off
High	>1/3 V_{CC}	>2/3 V_{CC}	Low	On
High	>1/3 V_{CC}	<2/3 V_{CC}	As previously established	

(1) Voltage levels shown are nominal.

LMx35, LMx35A Precision Temperature Sensors

1 Features

- Directly Calibrated to the Kelvin Temperature Scale
- 1°C Initial Accuracy Available
- Operates from 400 µA to 5 mA
- Less than 1-Ω Dynamic Impedance
- Easily Calibrated
- Wide Operating Temperature Range
- 200°C Overrange
- Low Cost

2 Applications

- Power Supplies
- Battery Management
- HVAC
- Appliances

3 Description

The LM135 series are precision, easily-calibrated, integrated circuit temperature sensors. Operating as a 2-terminal zener, the LM135 has a breakdown voltage directly proportional to absolute temperature at 10 mV/°K. With less than 1-Ω dynamic impedance, the device operates over a current range of 400 µA to 5 mA with virtually no change in performance. When calibrated at 25°C, the LM135 has typically less than 1°C error over a 100°C temperature range. Unlike other sensors, the LM135 has a linear output.

Applications for the LM135 include almost any type of temperature sensing over a −55°C to 150°C temperature range. The low impedance and linear output make interfacing to readout or control circuitry are especially easy.

The LM135 operates over a −55°C to 150°C temperature range while the LM235 operates over a −40°C to 125°C temperature range. The LM335 operates from −40°C to 100°C. The LMx35 devices are available packaged in hermetic TO transistor packages while the LM335 is also available in plastic TO-92 packages.

Device Information(1)

PART NUMBER	PACKAGE	BODY SIZE (NOM)
LM135	TO-46 (3)	4.699 mm × 4.699 mm
LM135A		
LM235	TO-92 (3)	4.30 mm × 4.30 mm
LM235A		
LM335	SOIC (8)	4.90 mm × 3.91 mm
LM335A		

(1) For all available packages, see the orderable addendum at the end of the datasheet.

Basic Temperature Sensor Simplified Schematic

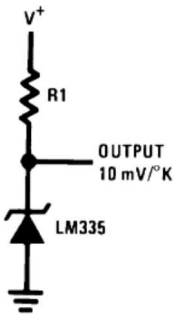

Calibrated Sensor

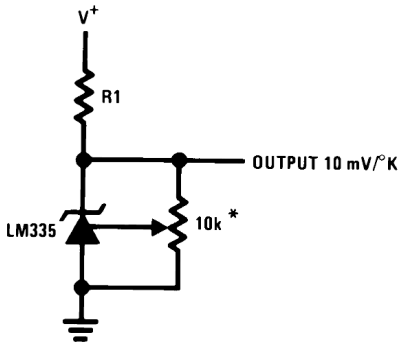

5 Pin Configuration and Functions

TO-46 (NDV)
3 Pins
Bottom View

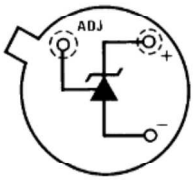

TO-92 (LP)
3 Pins
Bottom View

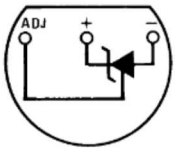

SOIC (D)
8 Pins
Top View

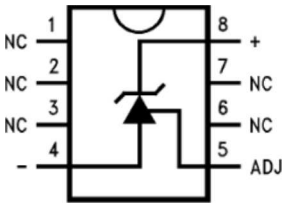

Pin Functions

PIN				I/O	DESCRIPTION
NAME	TO-46	TO-92	SO8		
N.C.	—	—	1	—	No Connection
	—	—	2		
	—	—	3		
–	—	—	4	O	Negative output
ADJ	—	—	5	I	Calibration adjust pin
N.C.	—	—	6	—	No Connection
	—	—	7		
+	—	—	8	I	Positive input

6.7 Typical Characteristics

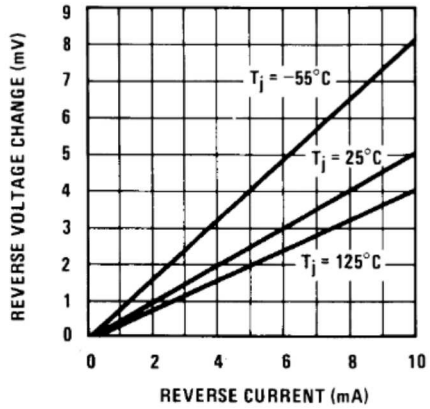

Figure 1. Reverse Voltage Change

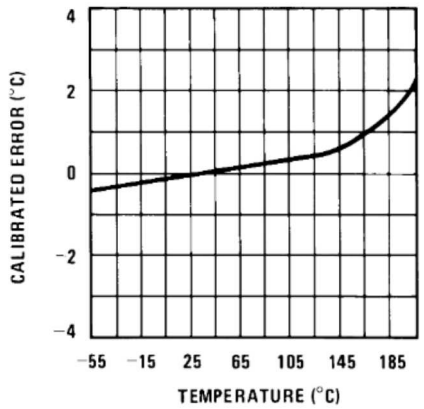

Figure 2. Calibrated Error

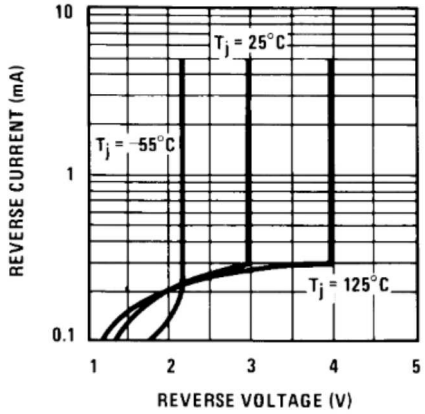

Figure 3. Reverse Characteristics

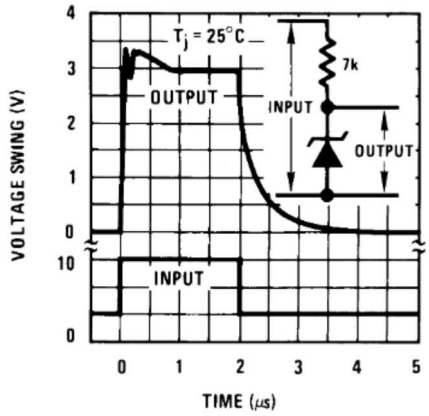

Figure 4. Response Time

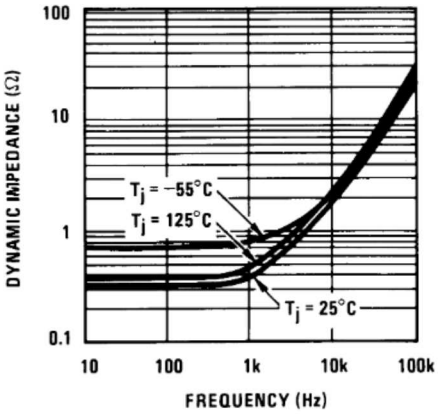

Figure 5. Dynamic Impedance

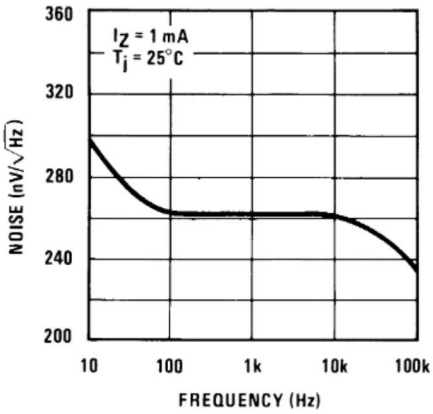

Figure 6. Noise Voltage

Typical Characteristics (continued)

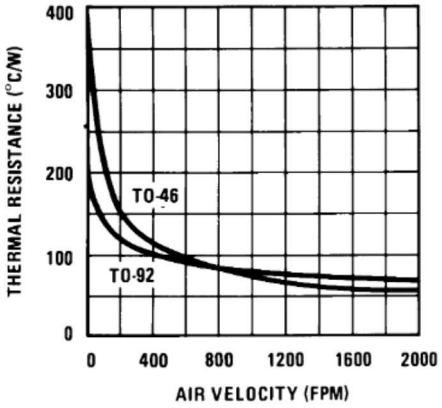

Figure 7. Thermal Resistance Junction To Air

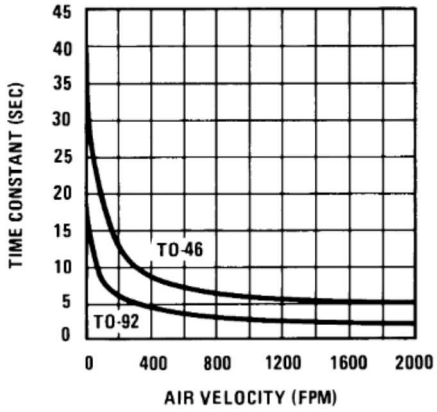

Figure 8. Thermal Time Constant

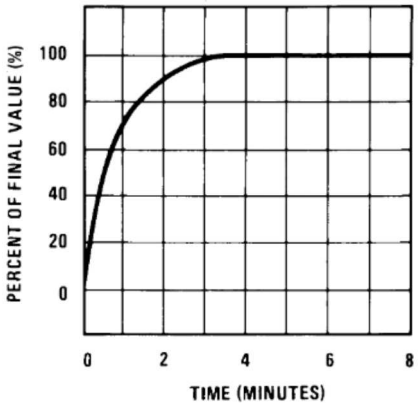

Figure 9. Thermal Response In Still Air

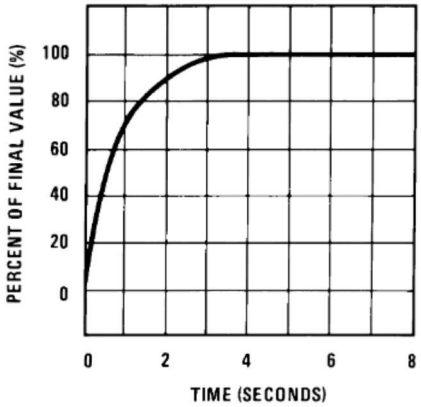

Figure 10. Thermal Response In Stirred Oil Bath

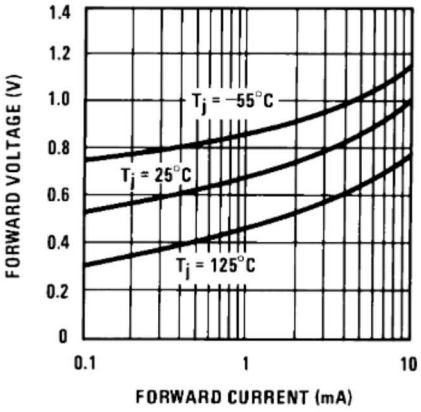

Figure 11. Forward Characteristics

7 Detailed Description

7.1 Overview

Applications for the LM135 include almost any type of temperature sensing over a −55°C to 150°C temperature range. The low impedance and linear output make interfacing to readout or control circuitry especially easy.

The LM135 operates over a −55°C to 150°C temperature range while the LM235 operates over a −40°C to 125°C temperature range. The LM335 operates from −40°C to 100°C.

Operating as a 2-terminal zener, the LM135 has a breakdown voltage directly proportional to absolute temperature at 10 mV/°K. With less than 1-Ω dynamic impedance, the device operates over a current range of 400 µA to 5 mA with virtually no change in performance. When calibrated at 25°C, the LM135 has typically less than 1°C error over a 100°C temperature range. Unlike other sensors, the LM135 has a linear output.

7.2 Functional Block Diagram

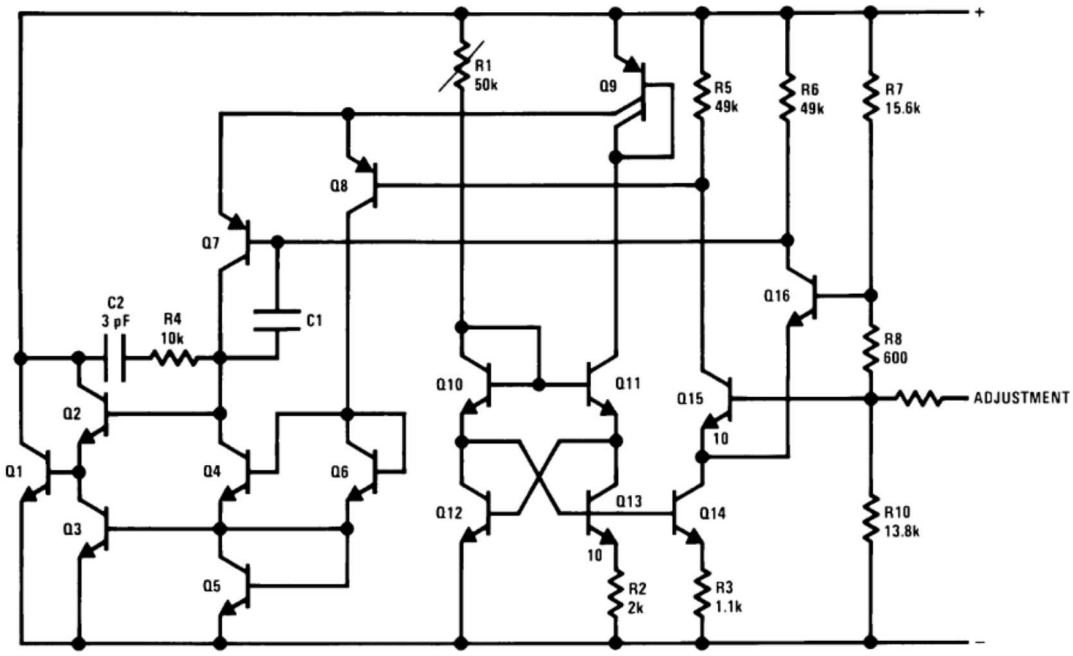

7.3 Feature Description

7.3.1 Temperature Calibration Using ADJ Pin

Included on the LM135 chip is an easy method of calibrating the device for higher accuracies. A pot connected across the LM135 with the arm tied to the adjustment terminal (as shown in Figure 12) allows a 1-point calibration of the sensor that corrects for inaccuracy over the full temperature range.

This single point calibration works because the output of the LM135 is proportional to absolute temperature with the extrapolated output of sensor going to 0-V output at 0 K (−273.15°C). Errors in output voltage versus temperature are only slope (or scale factor) errors so a slope calibration at one temperature corrects at all temperatures.

The output of the device (calibrated or uncalibrated) can be expressed as:

$$V_{OUT_T} = V_{OUT_{T_O}} \times \frac{T}{T_O}$$

where

ATmega48A/PA/88A/PA/168A/PA/328/P

ATMEL 8-BIT MICROCONTROLLER WITH 4/8/16/32KBYTES IN-SYSTEM PROGRAMMABLE FLASH

DATASHEET

Features

- High Performance, Low Power Atmel®AVR® 8-Bit Microcontroller Family
- Advanced RISC Architecture
  - 131 Powerful Instructions – Most Single Clock Cycle Execution
  - 32 x 8 General Purpose Working Registers
  - Fully Static Operation
  - Up to 20 MIPS Throughput at 20MHz
  - On-chip 2-cycle Multiplier
- High Endurance Non-volatile Memory Segments
  - 4/8/16/32KBytes of In-System Self-Programmable Flash program memory
  - 256/512/512/1KBytes EEPROM
  - 512/1K/1K/2KBytes Internal SRAM
  - Write/Erase Cycles: 10,000 Flash/100,000 EEPROM
  - Data retention: 20 years at 85°C/100 years at 25°C[1]
  - Optional Boot Code Section with Independent Lock Bits
    - In-System Programming by On-chip Boot Program
    - True Read-While-Write Operation
  - Programming Lock for Software Security
- Atmel® QTouch® library support
  - Capacitive touch buttons, sliders and wheels
  - QTouch and QMatrix® acquisition
  - Up to 64 sense channels
- Peripheral Features
  - Two 8-bit Timer/Counters with Separate Prescaler and Compare Mode
  - One 16-bit Timer/Counter with Separate Prescaler, Compare Mode, and Capture Mode
  - Real Time Counter with Separate Oscillator
  - Six PWM Channels
  - 8-channel 10-bit ADC in TQFP and QFN/MLF package
    - Temperature Measurement
  - 6-channel 10-bit ADC in PDIP Package
    - Temperature Measurement
  - Programmable Serial USART
  - Master/Slave SPI Serial Interface
  - Byte-oriented 2-wire Serial Interface (Philips I^2C compatible)
  - Programmable Watchdog Timer with Separate On-chip Oscillator
  - On-chip Analog Comparator
  - Interrupt and Wake-up on Pin Change

- Special Microcontroller Features
  - Power-on Reset and Programmable Brown-out Detection
  - Internal Calibrated Oscillator
  - External and Internal Interrupt Sources
  - Six Sleep Modes: Idle, ADC Noise Reduction, Power-save, Power-down, Standby, and Extended Standby
- I/O and Packages
  - 23 Programmable I/O Lines
  - 28-pin PDIP, 32-lead TQFP, 28-pad QFN/MLF and 32-pad QFN/MLF
- Operating Voltage:
  - 1.8 - 5.5V
- Temperature Range:
  - -40°C to 85°C
- Speed Grade:
  - 0 - 4MHz@1.8 - 5.5V, 0 - 10MHz@2.7 - 5.5.V, 0 - 20MHz @ 4.5 - 5.5V
- Power Consumption at 1MHz, 1.8V, 25°C
  - Active Mode: 0.2mA
  - Power-down Mode: 0.1μA
  - Power-save Mode: 0.75μA (Including 32kHz RTC)

Arduino UNO

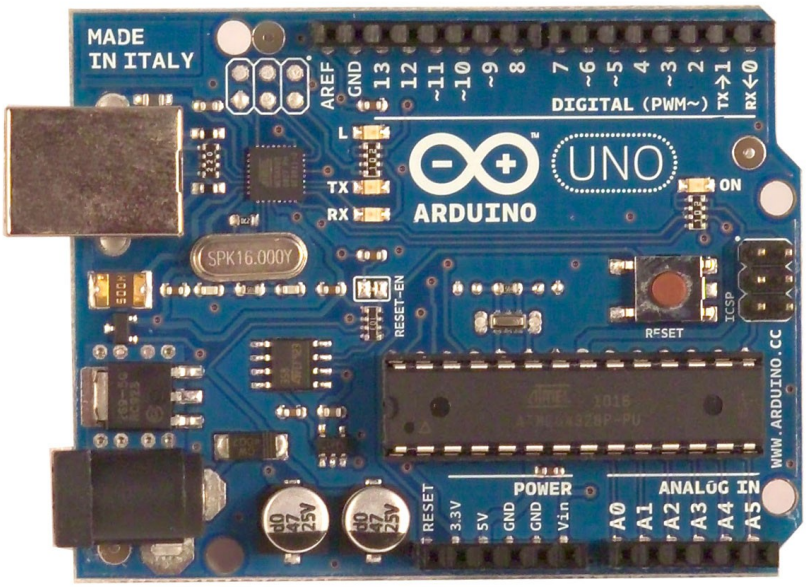

Product Overview

The Arduino Uno is a microcontroller board based on the ATmega328 (datasheet). It has 14 digital input/output pins (of which 6 can be used as PWM outputs), 6 analog inputs, a 16 MHz crystal oscillator, a USB connection, a power jack, an ICSP header, and a reset button. It contains everything needed to support the microcontroller; simply connect it to a computer with a USB cable or power it with a AC-to-DC adapter or battery to get started. The Uno differs from all preceding boards in that it does not use the FTDI USB-to-serial driver chip. Instead, it features the Atmega8U2 programmed as a USB-to-serial converter.

"Uno" means one in Italian and is named to mark the upcoming release of Arduino 1.0. The Uno and version 1.0 will be the reference versions of Arduno, moving forward. The Uno is the latest in a series of USB Arduino boards, and the reference model for the Arduino platform; for a comparison with previous versions, see the index of Arduino boards.

Index

Technical Specification

EAGLE files: arduino-duemilanove-uno-design.zip Schematic: arduino-uno-schematic.pdf

Summary

Microcontroller	ATmega328
Operating Voltage	5V
Input Voltage (recommended)	7-12V
Input Voltage (limits)	6-20V
Digital I/O Pins	14 (of which 6 provide PWM output)
Analog Input Pins	6
DC Current per I/O Pin	40 mA
DC Current for 3.3V Pin	50 mA
Flash Memory	32 KB of which 0.5 KB used by bootloader
SRAM	2 KB
EEPROM	1 KB
Clock Speed	16 MHz

the board

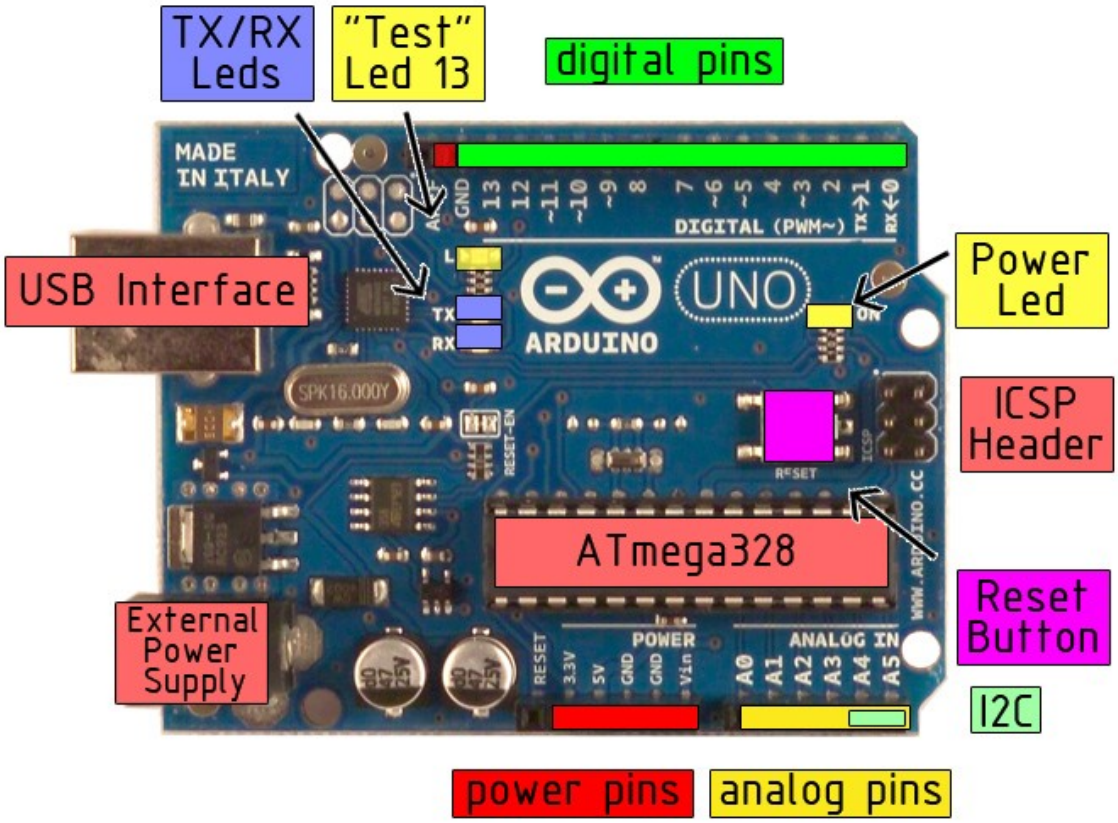

Power

The Arduino Uno can be powered via the USB connection or with an external power supply. The power source is selected automatically.

External (non-USB) power can come either from an AC-to-DC adapter (wall-wart) or battery. The adapter can be connected by plugging a 2.1mm center-positive plug into the board's power jack. Leads from a battery can be inserted in the Gnd and Vin pin headers of the POWER connector.

The board can operate on an external supply of 6 to 20 volts. If supplied with less than 7V, however, the 5V pin may supply less than five volts and the board may be unstable. If using more than 12V, the voltage regulator may overheat and damage the board. The recommended range is 7 to 12 volts.

The power pins are as follows:

- **VIN.** The input voltage to the Arduino board when it's using an external power source (as opposed to 5 volts from the USB connection or other regulated power source). You can supply voltage through this pin, or, if supplying voltage via the power jack, access it through this pin.
- **5V.** The regulated power supply used to power the microcontroller and other components on the board. This can come either from VIN via an on-board regulator, or be supplied by USB or another regulated 5V supply.
- **3V3.** A 3.3 volt supply generated by the on-board regulator. Maximum current draw is 50 mA.
- **GND.** Ground pins.

Memory

The Atmega328 has 32 KB of flash memory for storing code (of which 0,5 KB is used for the bootloader); It has also 2 KB of SRAM and 1 KB of EEPROM (which can be read and written with the EEPROM library).

Input and Output

Each of the 14 digital pins on the Uno can be used as an input or output, using pinMode(), digitalWrite(), and digitalRead() functions. They operate at 5 volts. Each pin can provide or receive a maximum of 40 mA and has an internal pull-up resistor (disconnected by default) of 20-50 kOhms. In addition, some pins have specialized functions:

- **Serial: 0 (RX) and 1 (TX).** Used to receive (RX) and transmit (TX) TTL serial data. TThese pins are connected to the corresponding pins of the ATmega8U2 USB-to-TTL Serial chip .
- **External Interrupts: 2 and 3.** These pins can be configured to trigger an interrupt on a low value, a rising or falling edge, or a change in value. See the attachInterrupt() function for details.
- **PWM: 3, 5, 6, 9, 10, and 11.** Provide 8-bit PWM output with the analogWrite() function.
- **SPI: 10 (SS), 11 (MOSI), 12 (MISO), 13 (SCK).** These pins support SPI communication, which, although provided by the underlying hardware, is not currently included in the Arduino language.

- **LED: 13.** There is a built-in LED connected to digital pin 13. When the pin is HIGH value, the LED is on, when the pin is LOW, it's off.

The Uno has 6 analog inputs, each of which provide 10 bits of resolution (i.e. 1024 different values). By default they measure from ground to 5 volts, though is it possible to change the upper end of their range using the AREF pin and the analogReference() function. Additionally, some pins have specialized functionality:

- **I^2C: 4 (SDA) and 5 (SCL).** Support I^2C (TWI) communication using the Wire library.

There are a couple of other pins on the board:

- **AREF.** Reference voltage for the analog inputs. Used with analogReference().
- **Reset.** Bring this line LOW to reset the microcontroller. Typically used to add a reset button to shields which block the one on the board.

See also the mapping between Arduino pins and Atmega328 ports.

Communication

The Arduino Uno has a number of facilities for communicating with a computer, another Arduino, or other microcontrollers. The ATmega328 provides UART TTL (5V) serial communication, which is available on digital pins 0 (RX) and 1 (TX). An ATmega8U2 on the board channels this serial communication over USB and appears as a virtual com port to software on the computer. The '8U2 firmware uses the standard USB COM drivers, and no external driver is needed. However, on Windows, an *.inf file is required..

The Arduino software includes a serial monitor which allows simple textual data to be sent to and from the Arduino board. The RX and TX LEDs on the board will flash when data is being transmitted via the USB-to-serial chip and USB connection to the computer (but not for serial communication on pins 0 and 1).

A SoftwareSerial library allows for serial communication on any of the Uno's digital pins.

The ATmega328 also support I2C (TWI) and SPI communication. The Arduino software includes a Wire library to simplify use of the I2C bus; see the documentation for details. To use the SPI communication, please see the ATmega328 datasheet.

Programming

The Arduino Uno can be programmed with the Arduino software (download). Select "Arduino Uno w/ ATmega328" from the **Tools > Board** menu (according to the microcontroller on your board). For details, see the reference and tutorials.

The ATmega328 on the Arduino Uno comes preburned with a bootloader that allows you to upload new code to it without the use of an external hardware programmer. It communicates using the original STK500 protocol (reference, C header files).

You can also bypass the bootloader and program the microcontroller through the ICSP (In-Circuit Serial Programming) header; see these instructions for details.

The ATmega8U2 firmware source code is available . The ATmega8U2 is loaded with a DFU bootloader, which can be activated by connecting the solder jumper on the back of the board (near the map of Italy) and then resetting the 8U2. You can then use Atmel's FLIP software (Windows) or the DFU programmer (Mac OS X and Linux) to load a new firmware. Or you can use the ISP header with an external programmer (overwriting the DFU bootloader).

Automatic (Software) Reset

Rather than requiring a physical press of the reset button before an upload, the Arduino Uno is designed in a way that allows it to be reset by software running on a connected computer. One of the hardware flow control lines (DTR) of the ATmega8U2 is connected to the reset line of the ATmega328 via a 100 nanofarad capacitor. When this line is asserted (taken low), the reset line drops long enough to reset the chip. The Arduino software uses this capability to allow you to upload code by simply pressing the upload button in the Arduino environment. This means that the bootloader can have a shorter timeout, as the lowering of DTR can be well-coordinated with the start of the upload.

This setup has other implications. When the Uno is connected to either a computer running Mac OS X or Linux, it resets each time a connection is made to it from software (via USB). For the following half-second or so, the bootloader is running on the Uno. While it is programmed to ignore malformed data (i.e. anything besides an upload of new code), it will intercept the first few bytes of data sent to the board after a connection is opened. If a sketch running on the board receives one-time configuration or other data when it first starts, make sure that the software with which it communicates waits a second after opening the connection and before sending this data.

The Uno contains a trace that can be cut to disable the auto-reset. The pads on either side of the trace can be soldered together to re-enable it. It's labeled "RESET-EN". You may also be able to disable the auto-reset by connecting a 110 ohm resistor from 5V to the reset line; see this forum thread for details.

USB Overcurrent Protection

The Arduino Uno has a resettable polyfuse that protects your computer's USB ports from shorts and overcurrent. Although most computers provide their own internal protection, the fuse provides an extra layer of protection. If more than 500 mA is applied to the USB port, the fuse will automatically break the connection until the short or overload is removed.

Physical Characteristics

The maximum length and width of the Uno PCB are 2.7 and 2.1 inches respectively, with the USB connector and power jack extending beyond the former dimension. Three screw holes allow the board to be attached to a surface or case. Note that the distance between digital pins 7 and 8 is 160 mil (0.16"), not an even multiple of the 100 mil spacing of the other pins.

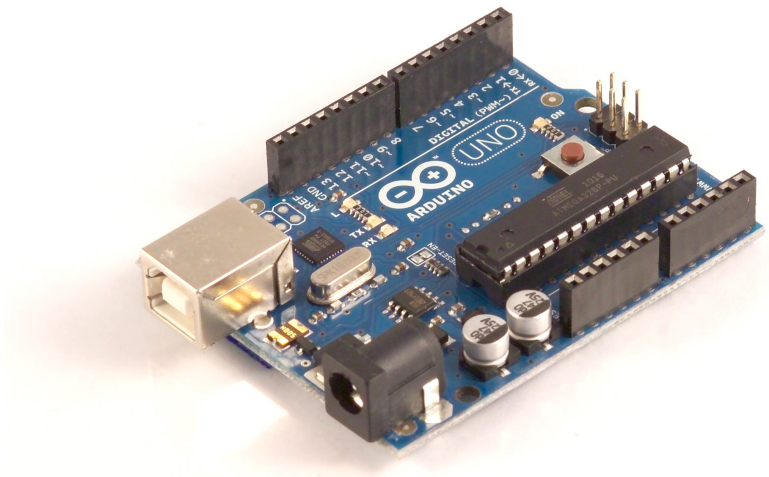

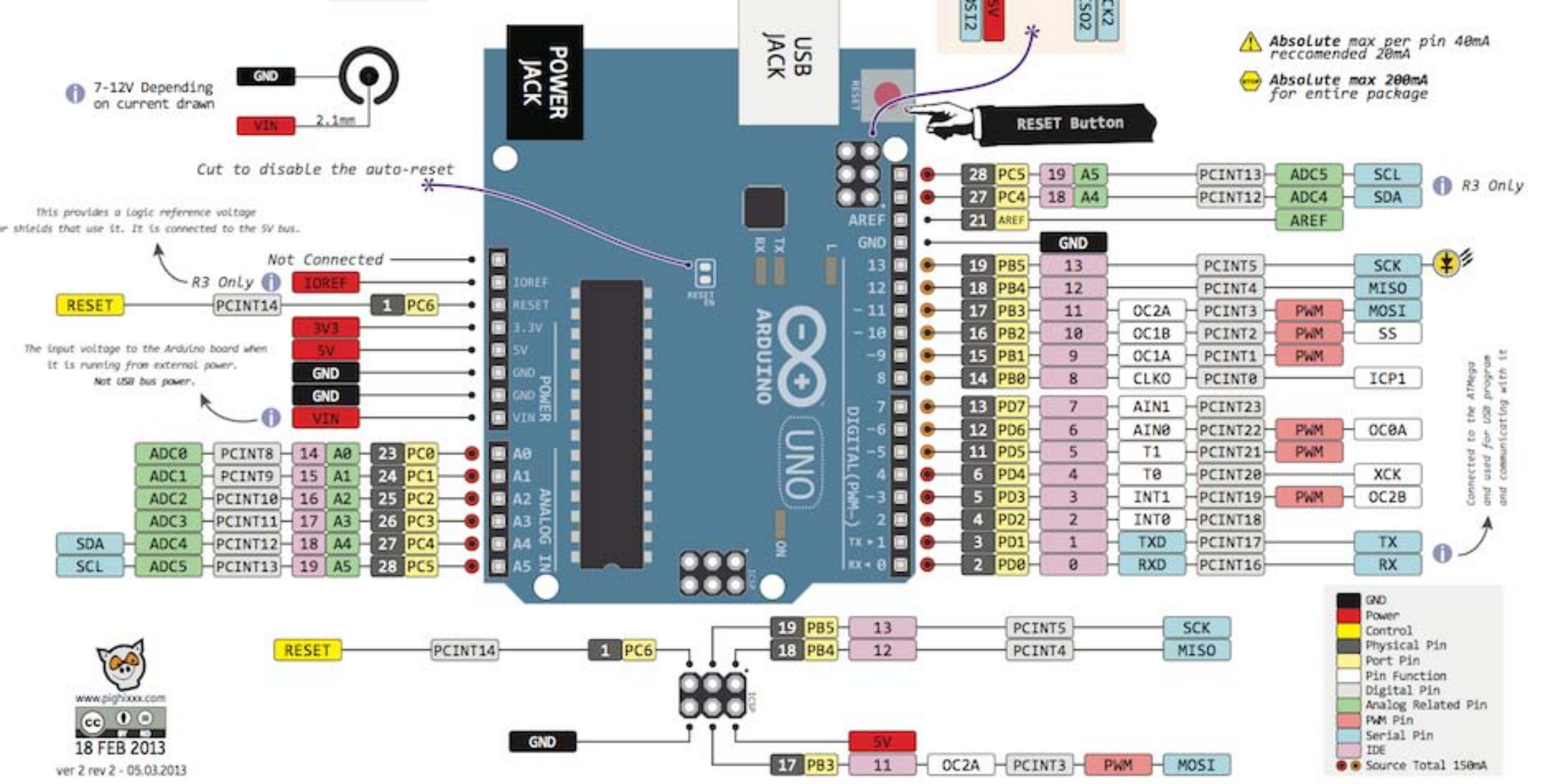
POWER JACK
USB JACK
7-12V Depending on current drawn
GND
VIN
2.1mm
Cut to disable the auto-reset
RESET Button
Absolute max per pin 40mA reccomended 20mA
Absolute max 200mA for entire package
This provides a Logic reference voltage for shields that use it. It is connected to the 5V bus.
Not Connected
R3 Only
IOREF
RESET
PCINT14
1 PC6
3V3
5V
GND
GND
VIN
The input voltage to the Arduino board when it is running from external power. Not USB bus power.
ADC0 PCINT8 14 A0 23 PC0
ADC1 PCINT9 15 A1 24 PC1
ADC2 PCINT10 16 A2 25 PC2
ADC3 PCINT11 17 A3 26 PC3
SDA ADC4 PCINT12 18 A4 27 PC4
SCL ADC5 PCINT13 19 A5 28 PC5
28 PC5 19 A5 PCINT13 ADC5 SCL
27 PC4 18 A4 PCINT12 ADC4 SDA
21 AREF AREF
GND
19 PB5 13 PCINT5 SCK
18 PB4 12 PCINT4 MISO
17 PB3 11 OC2A PCINT3 PWM MOSI
16 PB2 10 OC1B PCINT2 PWM SS
15 PB1 9 OC1A PCINT1 PWM
14 PB0 8 CLKO PCINT0 ICP1
13 PD7 7 AIN1 PCINT23
12 PD6 6 AIN0 PCINT22 PWM OC0A
11 PD5 5 T1 PCINT21 PWM
6 PD4 4 T0 PCINT20 XCK
5 PD3 3 INT1 PCINT19 PWM OC2B
4 PD2 2 INT0 PCINT18
3 PD1 1 TXD PCINT17 TX
2 PD0 0 RXD PCINT16 RX
R3 Only
Connected to the ATMega and used for USB program and communicating with it
ARDUINO UNO
DIGITAL (PWM~)
ANALOG IN
POWER
RESET
AREF
GND
13 12 ~11 ~10 ~9 8 7 ~6 ~5 4 ~3 2 TX→1 RX←0
A0 A1 A2 A3 A4 A5
IOREF RESET 3.3V 5V GND GND VIN
RESET PCINT14 1 PC6
19 PB5 13 PCINT5 SCK
18 PB4 12 PCINT4 MISO
ICSP
GND
5V
17 PB3 11 OC2A PCINT3 PWM MOSI
GND
Power
Control
Physical Pin
Port Pin
Pin Function
Digital Pin
Analog Related Pin
PWM Pin
Serial Pin
IDE
Source Total 150mA
www.pighixxx.com
18 FEB 2013
ver 2 rev 2 - 05.03.2013

1. XBee/XBee-PRO OEM RF Modules

The XBee and XBee-PRO OEM RF Modules were engineered to meet IEEE 802.15.4 standards and support the unique needs of low-cost, low-power wireless sensor networks. The modules require minimal power and provide reliable delivery of data between devices.

The modules operate within the ISM 2.4 GHz frequency band and are pin-for-pin compatible with each other.

1.1. Key Features

Long Range Data Integrity

XBee

- Indoor/Urban: up to 100' (30 m)
- Outdoor line-of-sight: up to 300' (100 m)
- Transmit Power: 1 mW (0 dBm)
- Receiver Sensitivity: -92 dBm

XBee-PRO

- Indoor/Urban: up to 300' (100 m)
- Outdoor line-of-sight: up to 1 mile (1500 m)
- Transmit Power: 100 mW (20 dBm) EIRP
- Receiver Sensitivity: -100 dBm

RF Data Rate: 250,000 bps

Advanced Networking & Security

Retries and Acknowledgements

DSSS (Direct Sequence Spread Spectrum)

Each direct sequence channels has over 65,000 unique network addresses available

Source/Destination Addressing

Unicast & Broadcast Communications

Point-to-point, point-to-multipoint and peer-to-peer topologies supported

Coordinator/End Device operations

Low Power

XBee

- TX Current: 45 mA (@3.3 V)
- RX Current: 50 mA (@3.3 V)
- Power-down Current: < 10 µA

XBee-PRO

- TX Current: 215 mA (@3.3 V)
- RX Current: 55 mA (@3.3 V)
- Power-down Current: < 10 µA

ADC and I/O line support

Analog-to-digital conversion, Digital I/O

I/O Line Passing

Easy-to-Use

No configuration necessary for out-of box RF communications

Free X-CTU Software (Testing and configuration software)

AT and API Command Modes for configuring module parameters

Extensive command set

Small form factor

Free & Unlimited RF-XPert Support

1.1.1. Worldwide Acceptance

FCC Approval (USA) Refer to Appendix A [p57] for FCC Requirements. Systems that contain XBee/XBee-PRO RF Modules inherit MaxStream Certifications.

ISM (Industrial, Scientific & Medical) **2.4 GHz frequency band**

Manufactured under **ISO 9001:2000** registered standards

XBee/XBee-PRO RF Modules are optimized for use in the **United States**, **Canada**, **Australia, Israel and Europe**. Contact MaxStream for complete list of government agency approvals.

1.2. Specifications

Table 1-01. Specifications of the XBee/XBee-PRO OEM RF Modules

Specification	XBee	XBee-PRO
Performance		
Indoor/Urban Range	up to 100 ft. (30 m)	Up to 300' (100 m)
Outdoor RF line-of-sight Range	up to 300 ft. (100 m)	Up to 1 mile (1500 m)
Transmit Power Output (software selectable)	1mW (0 dBm)	60 mW (18 dBm) conducted, 100 mW (20 dBm) EIRP*
RF Data Rate	250,000 bps	250,000 bps
Serial Interface Data Rate (software selectable)	1200 - 115200 bps (non-standard baud rates also supported)	1200 - 115200 bps (non-standard baud rates also supported)
Receiver Sensitivity	-92 dBm (1% packet error rate)	-100 dBm (1% packet error rate)
Power Requirements		
Supply Voltage	2.8 – 3.4 V	2.8 – 3.4 V
Transmit Current (typical)	45mA (@ 3.3 V)	If PL=0 (10dBm): 137mA(@3.3V), 139mA(@3.0V) PL=1 (12dBm): 155mA (@3.3V), 153mA(@3.0V) PL=2 (14dBm): 170mA (@3.3V), 171mA(@3.0V) PL=3 (16dBm): 188mA (@3.3V), 195mA(@3.0V) PL=4 (18dBm): 215mA (@3.3V), 227mA(@3.0V)
Idle / Receive Current (typical)	50mA (@ 3.3 V)	55mA (@ 3.3 V)
Power-down Current	< 10 µA	< 10 µA
General		
Operating Frequency	ISM 2.4 GHz	ISM 2.4 GHz
Dimensions	0.960" x 1.087" (2.438cm x 2.761cm)	0.960" x 1.297" (2.438cm x 3.294cm)
Operating Temperature	-40 to 85º C (industrial)	-40 to 85º C (industrial)
Antenna Options	Integrated Whip, Chip or U.FL Connector	Integrated Whip, Chip or U.FL Connector
Networking & Security		
Supported Network Topologies	Point-to-point, Point-to-multipoint & Peer-to-peer	
Number of Channels (software selectable)	16 Direct Sequence Channels	12 Direct Sequence Channels
Addressing Options	PAN ID, Channel and Addresses	PAN ID, Channel and Addresses
Agency Approvals		
United States (FCC Part 15.247)	OUR-XBEE	OUR-XBEEPRO
Industry Canada (IC)	4214A XBEE	4214A XBEEPRO
Europe (CE)	ETSI	ETSI (Max. 10 dBm transmit power output)*
Japan	n/a	005NYCA0378 (Max. 10 dBm transmit power output)**

* When operating in Europe: XBee-PRO RF Modules must be configured to operate at a maximum transmit power output level of 10 dBm. The power output level is set using the PL command. The PL parameter must equal "0" (10 dBm).

Additionally, European regulations stipulate an EIRP power maximum of 12.86 dBm (19 mW) for the XBee-PRO and 12.11 dBm for the XBee when integrating high-gain antennas.

** When operating in Japan: Transmit power output is limited to 10 dBm. A special part number is required when ordering modules approved for use in Japan. Contact MaxStream for more information [call 1-801-765-9885 or send e-mails to sales@max-stream.net].

Antenna Options: The ranges specified are typical when using the integrated Whip (1.5 dBi) and Dipole (2.1 dBi) antennas. The Chip antenna option provides advantages in its form factor; however, it typically yields shorter range than the Whip and Dipole antenna options when transmitting outdoors. For more information, refer to the "XBee Antenna" application note located on MaxStream's web site (http://www.maxstream.net/support/knowledgebase/article.php?kb=153).

1.5. Pin Signals

Figure 1-03. XBee/XBee-PRO RF Module Pin Numbers
(top sides shown - shields on bottom)

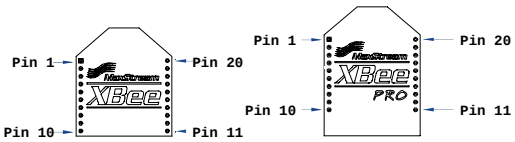

Table 1-02. Pin Assignments for the XBee and XBee-PRO Modules
(Low-asserted signals are distinguished with a horizontal line above signal name.)

Pin #	Name	Direction	Description
1	VCC	-	Power supply
2	DOUT	Output	UART Data Out
3	DIN / $\overline{\text{CONFIG}}$	Input	UART Data In
4	DO8*	Output	Digital Output 8
5	$\overline{\text{RESET}}$	Input	Module Reset (reset pulse must be at least 200 ns)
6	PWM0 / RSSI	Output	PWM Output 0 / RX Signal Strength Indicator
7	PWM1	Output	PWM Output 1
8	[reserved]	-	Do not connect
9	$\overline{\text{DTR}}$ / SLEEP_RQ / DI8	Input	Pin Sleep Control Line or Digital Input 8
10	GND	-	Ground
11	AD4 / DIO4	Either	Analog Input 4 or Digital I/O 4
12	$\overline{\text{CTS}}$ / DIO7	Either	Clear-to-Send Flow Control or Digital I/O 7
13	ON / SLEEP	Output	Module Status Indicator
14	VREF	Input	Voltage Reference for A/D Inputs
15	Associate / AD5 / DIO5	Either	Associated Indicator, Analog Input 5 or Digital I/O 5
16	$\overline{\text{RTS}}$ / AD6 / DIO6	Either	Request-to-Send Flow Control, Analog Input 6 or Digital I/O 6
17	AD3 / DIO3	Either	Analog Input 3 or Digital I/O 3
18	AD2 / DIO2	Either	Analog Input 2 or Digital I/O 2
19	AD1 / DIO1	Either	Analog Input 1 or Digital I/O 1
20	AD0 / DIO0	Either	Analog Input 0 or Digital I/O 0

* Function is not supported at the time of this release

Design Notes:

- Minimum connections: VCC, GND, DOUT & DIN
- Minimum connections for updating firmware: VCC, GND, DIN, DOUT, RTS & DTR
- Signal Direction is specified with respect to the module
- Module includes a 50k Ω pull-up resistor attached to $\overline{\text{RESET}}$
- Several of the input pull-ups can be configured using the PR command
- Unused pins should be left disconnected

2. RF Module Operation

2.1. Serial Communications

The XBee/XBee-PRO OEM RF Modules interface to a host device through a logic-level asynchronous serial port. Through its serial port, the module can communicate with any logic and voltage compatible UART; or through a level translator to any serial device (For example: Through a MaxStream proprietary RS-232 or USB interface board).

2.1.1. UART Data Flow

Devices that have a UART interface can connect directly to the pins of the RF module as shown in the figure below.

Figure 2-01. System Data Flow Diagram in a UART-interfaced environment
(Low-asserted signals distinguished with horizontal line over signal name.)

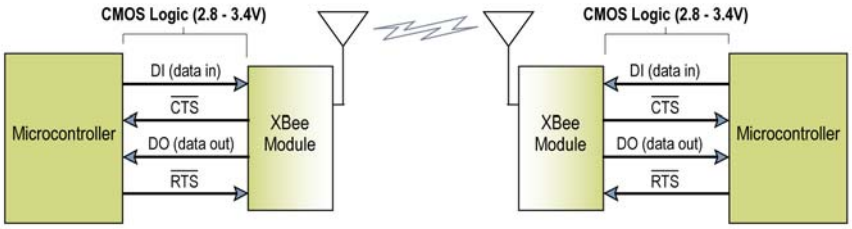

Serial Data

Data enters the module UART through the DI pin (pin 3) as an asynchronous serial signal. The signal should idle high when no data is being transmitted.

Each data byte consists of a start bit (low), 8 data bits (least significant bit first) and a stop bit (high). The following figure illustrates the serial bit pattern of data passing through the module.

Figure 2-02. UART data packet 0x1F (decimal number "31") as transmitted through the RF module
Example Data Format is 8-N-1 (bits - parity - # of stop bits)

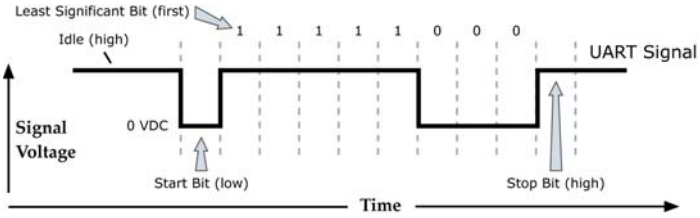

The module UART performs tasks, such as timing and parity checking, that are needed for data communications. Serial communications depend on the two UARTs to be configured with compatible settings (baud rate, parity, start bits, stop bits, data bits).

2.2. ADC and Digital I/O Line Support

The XBee/XBee-PRO RF Modules support ADC (Analog-to-digital conversion) and digital I/O line passing. The following pins support multiple functions:

Table 2-01. Pin functions and their associated pin numbers and commands
AD = Analog-to-Digital Converter, DIO = Digital Input/Output
Pin functions not applicable to this section are denoted within (parenthesis).

Pin Function	Pin#	AT Command
AD0 / DIO0	20	D0
AD1 / DIO1	19	D1
AD2 / DIO2	18	D2
AD3 / DIO3 / (COORD_SEL)	17	D3
AD4 / DIO4	11	D4
AD5 / DIO5 / (ASSOCIATE)	15	D5
DIO6 / (RTS)	16	D6
DIO7 / (CTS)	12	D7
DI8 / (DTR) / (Sleep_RQ)	9	D8

To enable ADC and DIO pin functions:

For ADC Support:	Set ATDn = 2
For Digital Input support:	Set ATDn = 3
For Digital Output Low support:	Set ATDn = 4
For Digital Output High support:	Set ATDn = 5

2.2.1. I/O Data Format

I/O data begins with a header. The first byte of the header defines the number of samples forthcoming. A sample is comprised of input data and the inputs can contain either DIO or ADC. The last 2 bytes of the header (Channel Indicator) define which inputs are active. Each bit represents either a DIO line or ADC channel.

Figure 2-04. Header

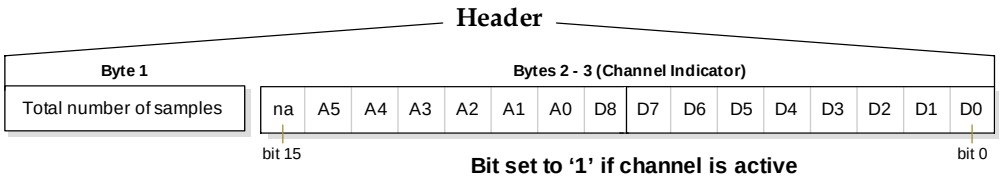

Sample data follows the header and the channel indicator frame is used to determine how to read the sample data. If any of the DIO lines are enabled, the first 2 bytes are the DIO data and the ADC data follows. ADC channel data is stored as an unsigned 10-bit value right-justified on a 16-bit boundary.

Figure 2-05. Sample Data

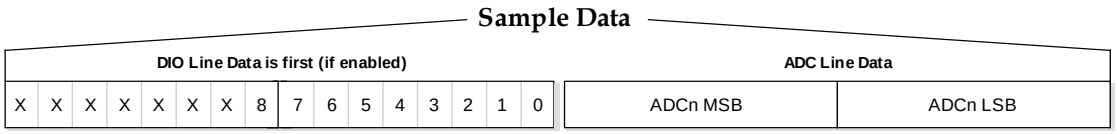

2.2.2. API Support

I/O data is sent out the UART using an API frame. All other data can be sent and received using Transparent Operation [refer to p10] or API framing if API mode is enabled (AP > 0).

API Operations support two RX (Receive) frame identifiers for I/O data:

- 0x82 for RX (Receive) Packet: 64-bit address I/O
- 0x83 for RX (Receive) Packet: 16-bit address I/O

The API command header is the same as shown in the “RX (Receive) Packet: 64-bit Address” and “RX (Receive) Packet: 64-bit Address” API types [refer to p56]. RX data follows the format described in the I/O Data Format section [p12].

Applicable Commands: AP (API Enable)

2.2.3. Sleep Support

When an RF module wakes, it will always do a sample based on any active ADC or DIO lines. This allows sampling based on the sleep cycle whether it be Cyclic Sleep (SM parameter = 4 or 5) or Pin Sleep (SM = 1 or 2). To gather more samples when awake, set the IR (Sample Rate) parameter.

For Cyclic Sleep modes: If the IR parameter is set, the module will stay awake until the IT (Samples before TX) parameter is met. The module will stay awake for ST (Time before Sleep) time.

Applicable Commands: IR (Sample Rate), IT (Samples before TX), SM (Sleep Mode), IC (DIO Change Detect)

2.2.4. DIO Pin Change Detect

When “DIO Change Detect” is enabled (using the IC command), DIO lines 0-7 are monitored. When a change is detected on a DIO line, the following will occur:

1. An RF packet is sent with the updated DIO pin levels. This packet will not contain any ADC samples.
2. Any queued samples are transmitted before the change detect data. This may result in receiving a packet with less than IT (Samples before TX) samples.

Note: Change detect will not affect Pin Sleep wake-up. The D8 pin (DTR/Sleep_RQ/DI8) is the only line that will wake a module from Pin Sleep. If not all samples are collected, the module will still enter Sleep Mode after a change detect packet is sent.

Applicable Commands: IC (DIO Change Detect), IT (Samples before TX)

NOTE: Change detect is only supported when the Dx (DIOx Configuration) parameter equals 3,4 or 5.

2.2.5. Sample Rate (Interval)

The Sample Rate (Interval) feature allows enabled ADC and DIO pins to be read periodically on modules that are not configured to operate in Sleep Mode. When one of the Sleep Modes is enabled and the IR (Sample Rate) parameter set, the module will stay awake until IT (Samples before TX) samples have been collected.

Once a particular pin is enabled, the appropriate sample rate must be chosen. The maximum sample rate that can be achieved while using one A/D line is 1 sample/ms or 1 KHz (Note that the modem will not be able to keep up with transmission when IR & IT are equal to “1”).

Applicable Commands: IR (Sample Rate), IT (Samples before TX), SM (Sleep Mode)

2.2.6. I/O Line Passing

Virtual wires can be set up between XBee/XBee-PRO Modules. When an RF data packet is received that contains I/O data, the receiving module can be setup to update any enabled outputs (PWM and DIO) based on the data it receives.

Note that I/O lines are mapped in pairs. For example: AD0 can only update PWM0 and DI5 can only update DO5). The default setup is for outputs not to be updated, which results in the I/O data being sent out the UART (refer to the IU (Enable I/O Output) command). To enable the outputs to be updated, the IA (I/O Input Address) parameter must be setup with the address of the module that has the appropriate inputs enabled. This effectively binds the outputs to a particular module's input. This does not affect the ability of the module to receive I/O line data from other modules - only its ability to update enabled outputs. The IA parameter can also be setup to accept I/O data for output changes from any module by setting the IA parameter to 0xFFFF.

When outputs are changed from their non-active state, the module can be setup to return the output level to it non-active state. The timers are set using the Tn (Dn Output Timer) and PT (PWM Output Timeout) commands. The timers are reset every time a valid I/O packet (passed IA check) is received. The IC (Change Detect) and IR (Sample Rate) parameters can be setup to keep the output set to their active output if the system needs more time than the timers can handle.

Note: DI8 can not be used for I/O line passing.

Applicable Commands: IA (I/O Input Address), Tn (Dn Output Timeout), P0 (PWM0 Configuration), P1 (PWM1 Configuration), M0 (PWM0 Output Level), M1 (PWM1 Output Level), PT (PWM Output Timeout), RP (RSSSI PWM Timer)

2.2.7. Configuration Example

As an example for a simple A/D link, a pair of RF modules could be set as follows:

Remote Configuration	Base Configuration
DL = 0x1234	DL = 0x5678
MY = 0x5678	MY = 0x1234
D0 = 2	P0 = 2
D1 = 2	P1 = 2
IR = 0x14	IU = 1
IT = 5	IA = 0x5678 (or 0xFFFF)

These settings configure the remote module to sample AD0 and AD1 once each every 20 ms. It then buffers 5 samples each before sending them back to the base module. The base should then receive a 32-Byte transmission (20 Bytes data and 12 Bytes framing) every 100 ms.